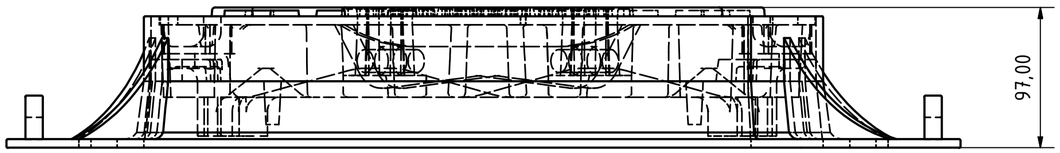

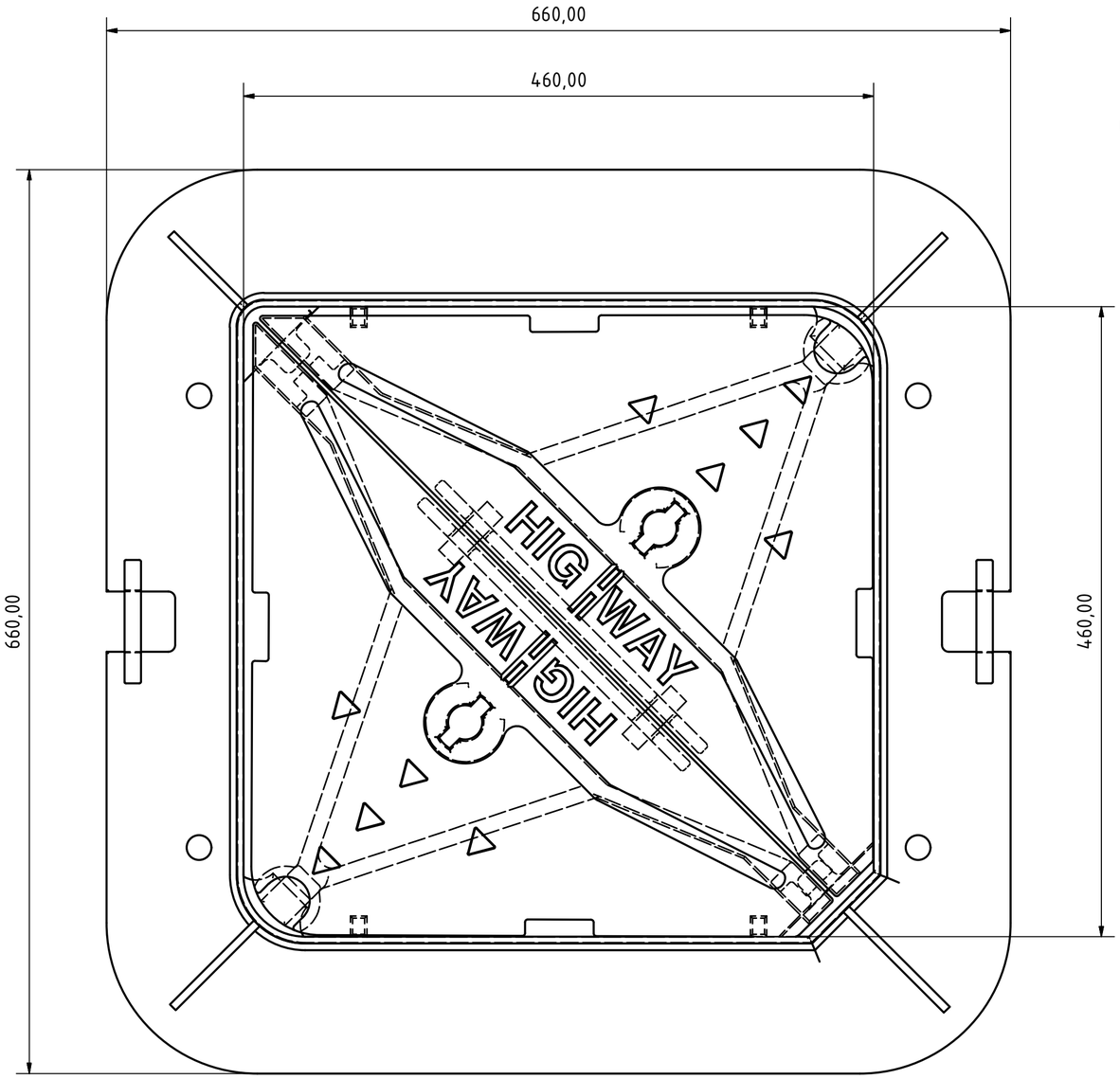

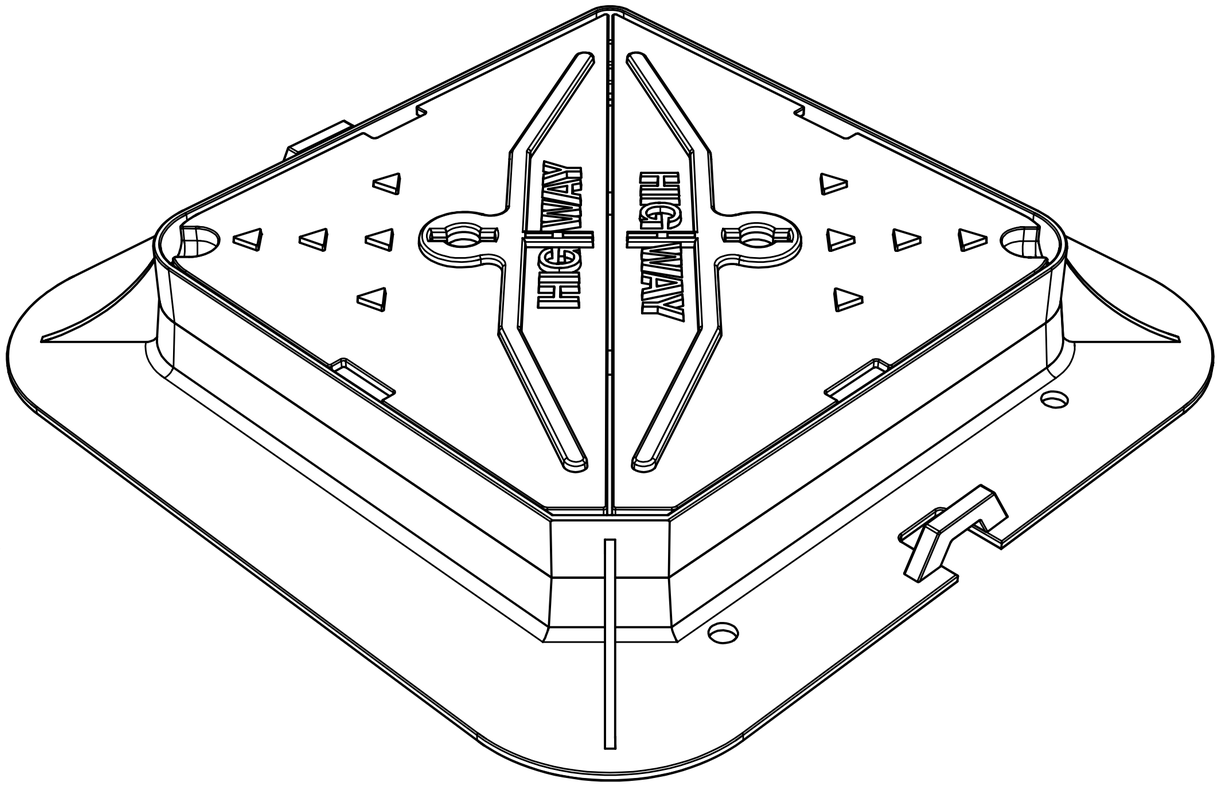

					Date	Name
				Drawn	31-10-2020	eugeneraaijmakers
				Checked		
				Standard		
State	Changes	Date	Name			

MOD-D-045045010-D-HI

1

A2